NMTC module

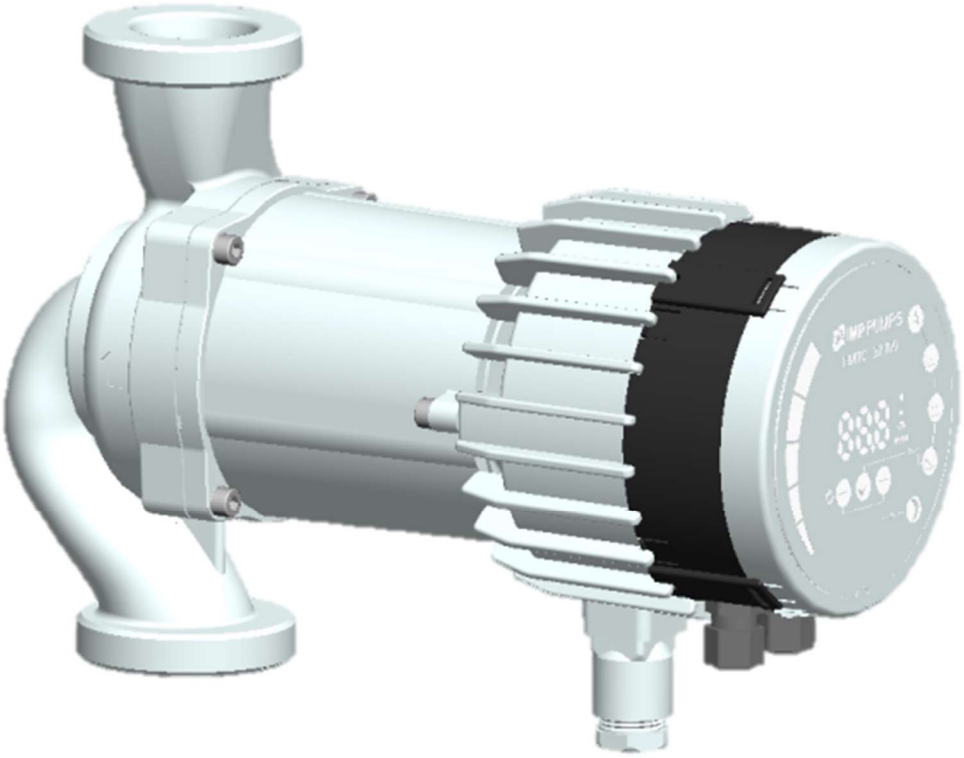

EN

Installation and operating manual for

- NMT Smart C
- NMT Max C
- NMT Lan C

7340055, v26, for software revision 2.239 onwards

WARNING!
Prior to installation and commissioning, read these instructions first. Installation and operation must comply with local regulations.

WARNING!
Installation and use of this product requires experience and knowledge of this or similar products. Persons with reduced physical, mental or sensory capabilities must not use this product, unless properly instructed and supervised. Children must not be allowed to play with this product.

CONTENTS

1. SYMBOLS AND CONVENTIONS USED IN THIS DOCUMENT

WARNING!
Denotes that a failure to observe those instructions might cause damage to equipment or pose danger to the user.

NOTE: - Gives additional tips or instructions that might ease the job and ensure proper operation.

NOTE:

- Data in this document are subject to change.
- Actual implementation might differ by pump model and software revision.
- Make sure you are using the right manual for your product.
- Verify proper operation in the final system.
- Manufacturer cannot be held responsible for problems caused either directly or indirectly by the use of information in this manual.

1.1. ABBREVIATIONS AND CONVENTIONS

Abbreviation	Description
Baud, Baud rate	Serial communication speed, in bits per second including start, parity and stop bits.
CRC	Cyclic Redundancy Check, additional bytes used to confirm valid data transmission.
Ethernet	IEEE 802.3, mostly referring to 10BASE-T RJ-45 connector present on board.
H	Differential pressure, often called Head.
LED	Light Emitting Diode.
Modbus	A communication protocol used for device automation and remote access.
NMTC	NMT pump Communication module.
Q	Pump flow or flow rate.
RTU	Remote Terminal Unit.
RS-485	Multi drop serial network wiring, used to transfer data.
TCP	Transmission Control Protocol is a digital data packet handling
UDP	User Datagram Protocol is a digital data packet handling

For Modbus use, this manual assumes that the reader is familiar with commissioning and configuring of Modbus devices.

For Ethernet and web interface use, this manual assumes that the reader knows how to configure or already has preconfigured Ethernet network.

For use of analog signals and relay output signals, external controller needs to be configured and used. Proper operating mode must also be selected for the module.

2. INTRODUCTION

This manual describes the NMTC module for NMT range of pumps that is either integrated (NMT LAN C) or separately (NMT Smart C and NMT MAX C) available.

Purpose of this module is to provide communication interface to the pump.

This module is intended for various remote control applications, including:

- Remote on/off
- Analog 0..10 V voltage control and feedback
- Analog 4..20 mA control and feedback
- PWM control and feedback
- Status relay feedback
- Modbus slave/device
- Web browser access over Ethernet

2.1. SYSTEM DIAGRAM

There are several possible connection configurations. Not all functions can be used simultaneously due to limited amount of outputs, inputs and inlet glands.

Typical configurations	
	- on/off + 0..10 V + relay output - Ethernet + on/off + 0..10 V - Ethernet + on/off + relay output - Modbus RTU + Relay output - Modbus RTU + Ethernet - …

2.2. SPECIFICATIONS

The table below is an overview of NMTC specifications. For details, please refer to appropriate sections of this manual.

General data		
Ambient humidity	<95 % relative, non-condensing	Also see appropriate pump data for other ambient specifications.
Dimensions [Φ x H]	112 mm x 32 (45) mm	Module dimensions without glands.
Power supply and connection	5 V@500 mA supplied by the pump	6-pin connector further extended for display.

RS-485		
Connector type	Screwless terminals	2+1 pins. See section 3.1 Terminals
Data protocol	• Modbus RTU	Only one at a time.
Bus wire configuration	Two-wire + common	Conductors: A, B and COM (Common). See section 3.1 Terminals
Communication transceiver	Integrated, 1/8 of standard load	Connect either via passive taps or daisy chain.
Maximum cable length	1200 m	See section 6.6 Termination
Line termination	Not present	Line termination is not integrated. For low speed/short distance, termination can be omitted. Otherwise, terminate the line externally on both ends.
Supported transmission speeds	1200, 2400, 4800, 9600, 19200, 38400 baud	Settable over Modbus register [default=19200].
Start bits, data bits	1, 8	Fixed.
Stop bits	1 or 2	1 stop bit minimum, up to 2 when parity not enabled [default=1]
Parity bit	Even/odd/none	[default=Even]
Visual diagnostics	LED2	Flashing yellow when data reception detected. Combined (OR) with Ethernet ACT function.
Maximum number of devices	247	Limited by possible Modbus addresses to 247. 1/8 nominal load enables 256 devices.
Isolation	Common ground (COM) with SET1, SET2 and SET3.	Bus shares common ground with other signals.

Ethernet		
Connector type	RJ-45	10BASE-T, 10Mbit/s connection.
Connection type and services	- Http Web server (port 80) - Firmware update over http - Modbus (port 502)	
Default IP address	192.168.0.245	192.168.0.246 for right twin pump.
Ethernet visual diagnostics	LED1 / LINK	Slowly blinking when module is powered, permanently lid when link established.
	LED2 / ACT	Flashing yellow when data reception detected. Combined (OR) with Modbus data reception indication.

Modbus RTU over RS-485		
Slave address	1-247	Default is 245, settable over Modbus. See section 6.5 Speed, parity and address
Maximum Modbus packet size	256 bytes	Including address (1) and CRC (2) bytes.

Modbus over Ethernet		
Server address	192.168.0.245:502	IP address is the same as for pump web server, port is fixed as 502
Device address	245	Default value, can be changed over Modbus
Data format and protocols	• Modbus TCP • Modbus RTU over TCP • Modbus UDP • Modbus RTU over UDP	Protocol is automatically selected according to established connection and received request.

Analog signals (SET1, SET2, SET3)		
Input voltage range	-1..32 VDC	When used as input.
Output voltage source range	0..12 V	When used as voltage output. 5 mA max. Load allowed per output.
Input resistance	~100 kΩ	0.5 mA load is added for most configurations.
Output current sink range	0..33 mA (4-20 mA)	Current sink to COM if configured as current output.
PWM input threshold	~3 V	5 mA current sink added.
PWM input frequency	0..10 kHz	
PWM out frequency	75 Hz	

Relay specifications		
Connection type	Screwless terminals	
Rating	- 230 VAC, 3 A, AC1 - 32 VDC, 3 A	Potential free changeover contact.

3. MODULE LAYOUT

3.1. TERMINALS

Terminal Designation	Terminal description
MODE	Mode selection rotary switch. Position read at power-on. Used to configure mode of operation for the circuit. See section 4.3 “Module mode selection”.
LED1 / LINK	Slowly blinking when module is powered. Blinking fast on Modbus Error Permanently lid when Ethernet link established.
Ethernet	10BASE-T RJ-45 connector.
LED2 / ACT	Indicates Ethernet activity or RS-485 activity.
B/D-	RS-485 negative data signal.
A/D+	RS-485 positive data signal.
SET1 / RUN	Control signal 1.
COM / 0V	RS-485 common and analog input common return.
SET2 / MAX	Control signal 2.
SET3 / FB	Control signal 3.
+24V	24 V, 50 mA output (only on some models)
NC	Normally closed relay contact. Opens when relay is active.
C	Relay common contact.
NO / OK	Normally open relay contact. Closes when relay is active.

Terminal layout with factory configuration	
LAN C, MAX (>850W) terminals	SMART C, MAX C (<850W) terminals

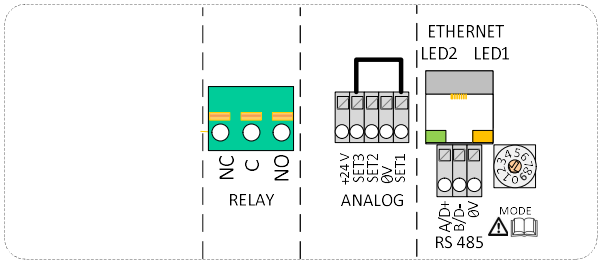

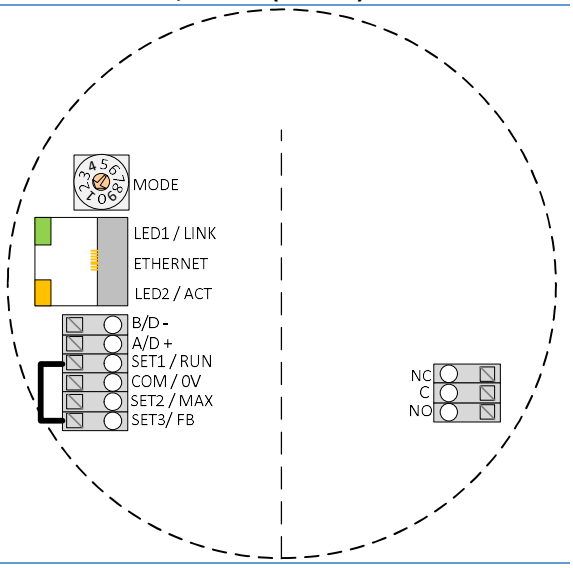

3.2. APPLICATION EXAMPLES

Relay, Analog and Modbus connection

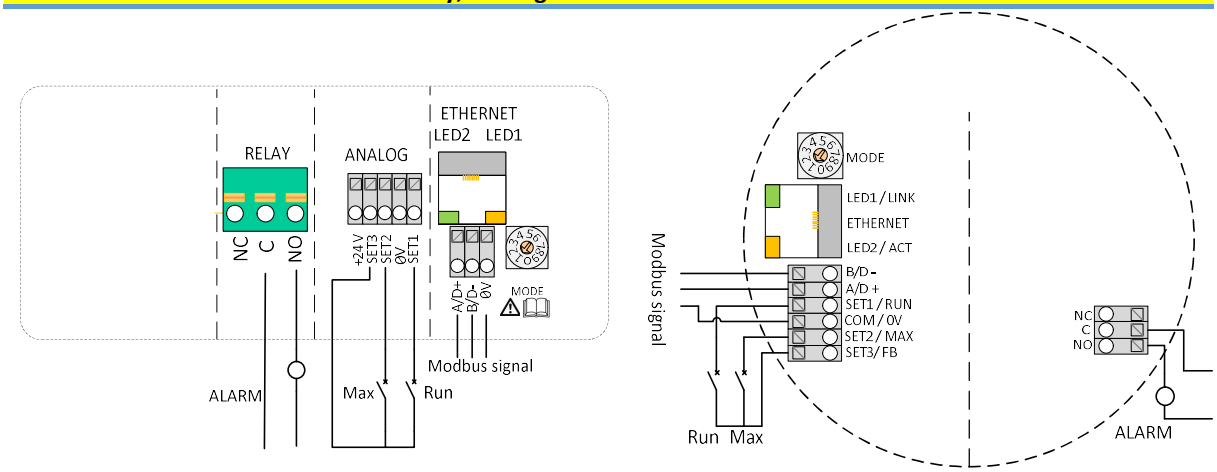

Relay and Ethernet connection

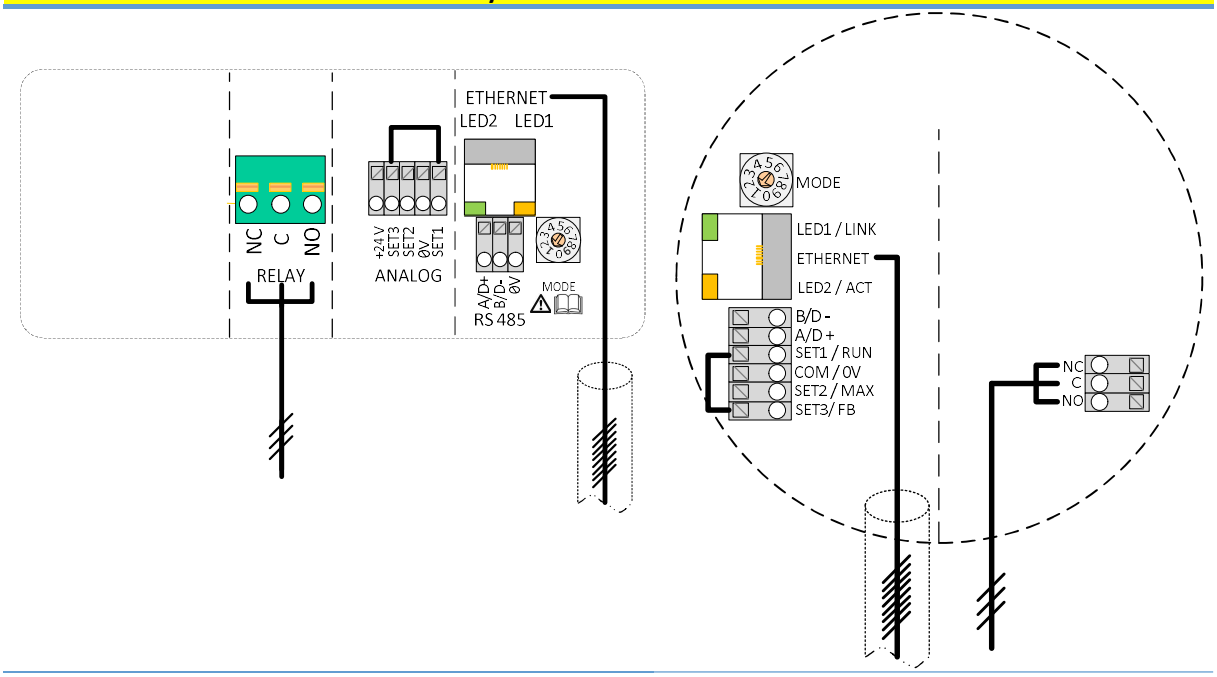

NOTE: To maintain pump IP (ingress protection), the network cable should be pulled through the gland inlet and then crimped to a connector.

3.3. WIRING CONSIDERATIONS

- All cables connected must be heat-resistant to at least +85 °C.
- All cables connected must be installed in accordance with EN 60204-1.
- All wires to the communications module must be connected to the terminals or cut. No loose wiring permitted.

WARNING!

If voltages over 24 V AC/DC are possible on NO, C, NC terminals:

- Wires should be routed so no wire crosses the center barrier.
- Relay cable (NO, C, NC) must be separated from all other wiring with reinforced insulation. Cable outer layer must not be stripped longer than 15 mm. See “Cabling preparation” below.

Cabling preparation

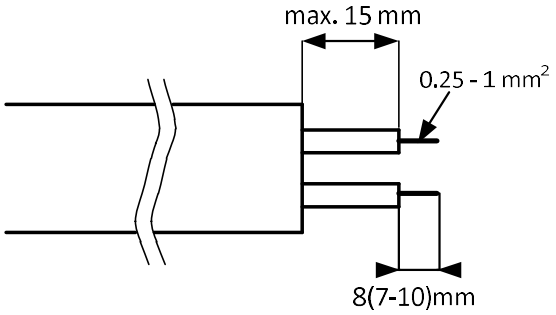

Cable for the screwless terminals should be prepared as shown on the left.

Tools

2.4 mm wide flat-bladed screwdriver is needed to press the terminal spring while inserting the cable.
Same tool is also used to rotate the Mode switch.

3.4. MODULE INSTALLATION

Only for NMT Smart and NMT MAX pump models.

Installing the module

WARNING!

Before performing any work on the module, make sure that the pump and module electricity supply has been switched off and that it cannot be accidently switched on.

Press two top hooks on the display panel. Use flat tip screwdriver if needed and simultaneously pull display panel away from the pump.

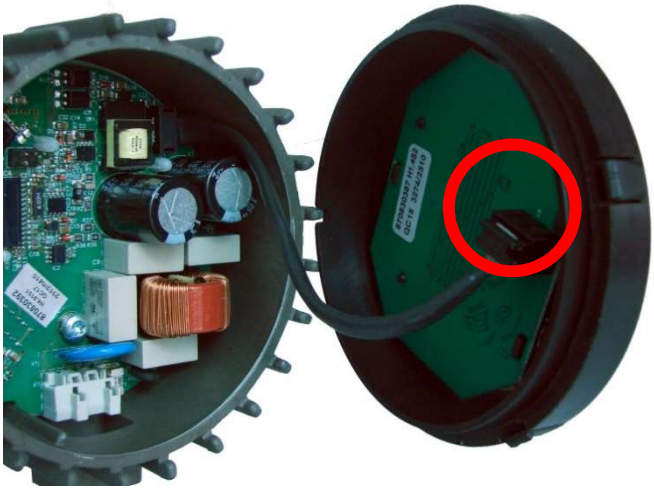

Disconnect display panel cable to ease access to the module wiring. Wiring can now be connected.

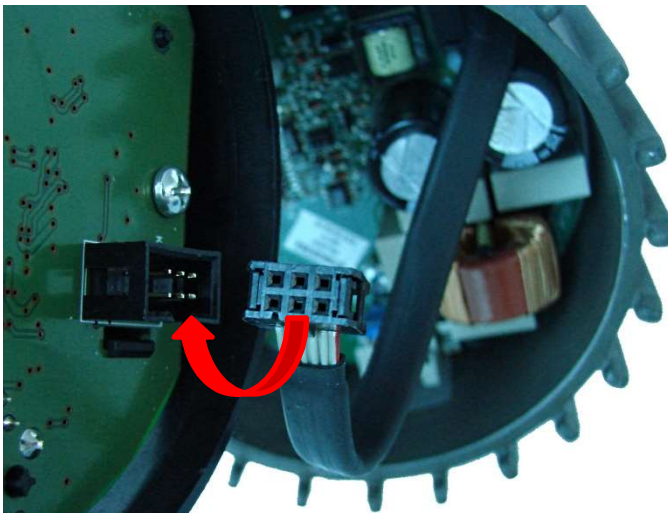

Connect the NMTC module with power electronics.

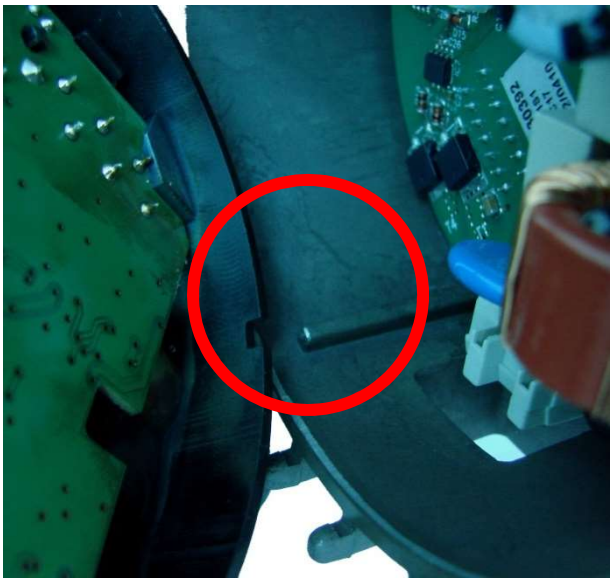

Make sure that the position tab and position slot are aligned.

Push the NMTC module back to the heat sink

3.5. CONNECTING THE MODULE WIRING

Only for NMT Smart and NMT MAX pump models.

Opening the cover

WARNING!
Before performing any work on the module, make sure that the pump and module electricity supply has been switched off and that it cannot be accidently switched on.

Press two top hooks on the display panel (Use flat tip screwdriver if needed) and simultaneously pull display panel away from the pump.

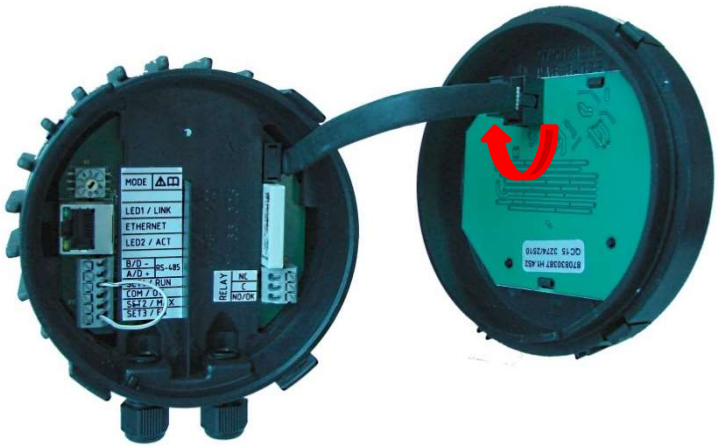

Disconnect display panel cable to ease access to the module wiring.

Wiring can now be connected.

Closing the cover

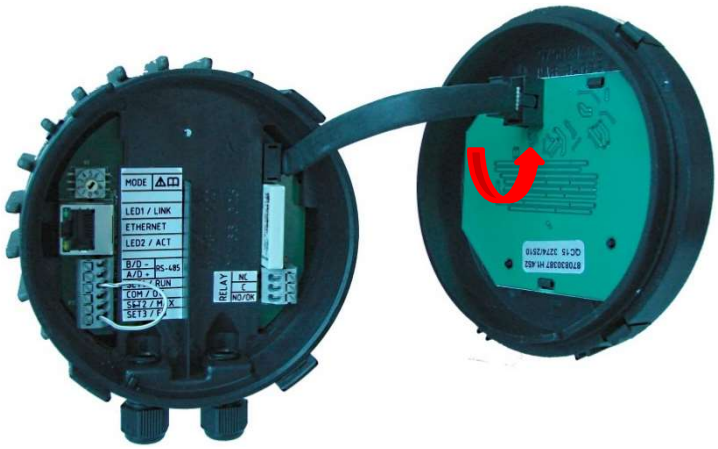

WARNING!
Before performing any work on the module, make sure that the pump and module electricity supply has been switched off and that it cannot be accidently switched on.

Reconnect display panel cable.

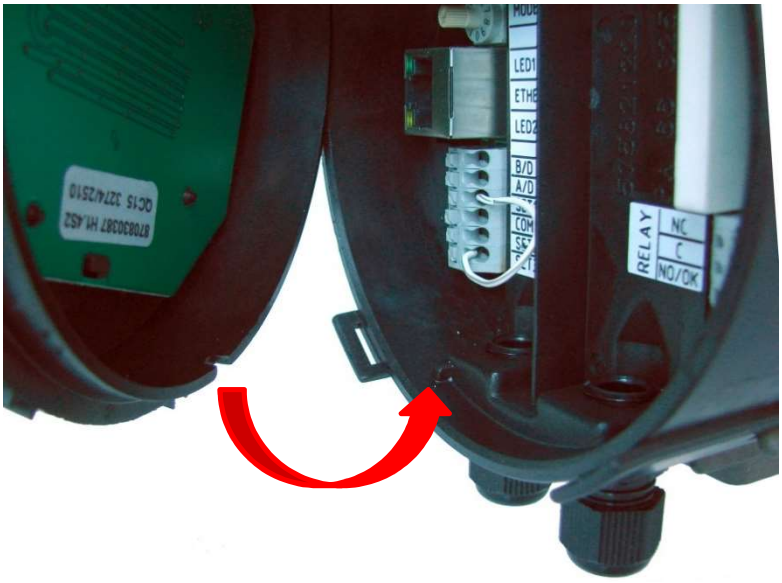

Make sure that the position tab and position slot are aligned.

Make sure that the hooks are aligned.

Push the display back to the NMTC module.

4. CONTROL MODES AND PRIORITIES

4.1. PRIORITY OF SETTINGS

Several signals will influence the pump operation. For this reason, settings have priorities as shown in the table below. If two or more functions are active at the same time, the one with highest priority will take precedence.

Priority	Pump control panel & Ethernet settings	External signals[1]	Modbus control
1	Stop (OFF)		
2	Night mode active[2]		
3	Max. RPM (Hi)		
4		Min. curve[4]	
5		Stop (Run not active)	
6		Max. curve[4]	Stop[3]
7		Set point setting[4]	Set point setting[3]
8	Set point setting[4]		

Examples:

- Stop on the pump display panel will stop the pump, regardless of external set point.
- If External Run input is inactive, the pump cannot be started over Modbus, but can be set to max RPM on the display panel.

4.2. CONTROL VARIABLES

Pump will respond to external controls according to selected pump operating mode. Consult proper pump operating manual for explanation.

Symbol	Regulation mode	Module set point controls:
	Auto mode	- (RUN only)
	Proportional pressure	Maximum head
	Constant pressure	Maximum head
	Constant speed	Speed (RPM)
	Combined[5]	- (Web interface only)
	Night mode[6]	- (RUN only)

[1] Not all inputs are available in all modes.
[2] External and Modbus Stop signals become active in night mode. Due to possible confusion, use of night mode is discouraged while using external control.
[3] Only available when pump is bus controlled.
[4] Not available when pump is bus controlled.
[5] Multiple limits can be set. Not available on all pumps.
[6] Night mode is not independent regulation mode.

4.3. MODULE MODE SELECTION

WARNING!
Before performing any work on the module, make sure that the pump and module electricity supply has been switched off and that it cannot be accidently switched on.

There is a mode selection rotary switch in the terminal box. It can be rotated by gently inserting a screwdriver into the arrow mark on top and rotating the switch to desired value. This enables manual configuration according to table below. For advanced configuration, place rotary switch to position 0 and configure module over network.

Mode switch position	Function	Description
0	Free configuration	Terminal functions are configured over Ethernet interface.
1	Mode 1 (2-10V control)	SET1 = RUN input SET2 = MAX input SET3 = FB (10.5 V) output, can be used to supply RUN and MAX inputs. See section “4.4 Mode 1”.
2	Mode 2 (0-10V control)	SET1 = RUN input SET2 = SPEED input SET3 = FB (10.5 V) output, can be used to supply RUN and SPEED inputs. See section “4.5 Mode 2”.
3	Mode 3 (PWM Solar)	SET1 = PWM-in (0 % = Pump OFF) SET2 = PWM-out status SET3 = FB (10.5 V) output, can be used to supply SET1 and SET2 bias. See section “4.6 Mode 3, 4 ”
4	Mode 4 (PWM Heating)	SET1 = PWM-in (100 % = Pump OFF) SET2 = PWM-out status SET3 = FB (10.5 V) output, can be used to supply SET1 and SET2 bias. See section “4.6 Mode 3, 4 ”
5	RESERVED	Reserved for future or customer specific use.
6	Show relay configuration	LED1 and LED2 will show relay configuration. See section “5. Relay output”.
7	Change relay configuration	Relay configuration will be increased (0->1, 1->2, 2->0) when power is turned on. LED1 and LED2 will show current relay configuration. See section “5. Relay output”.
8	Twin reset to factory	Same as Mode 9, with exception of: module IP address is set to 192.168.0.246 Twin IP address is set to 192.168.0.245
9	Reset to factory	This mode will set communication interface to default values. Main purpose is to restore default settings. **NOTE:** • SET1, SET2, SET3 will output test voltages of 10 V, 7 V and 5 V respectively. RS-485 port is actively driven. Relay will cycle. • Make sure that external controllers will not be harmed by conditions above, otherwise disconnect.

4.4. MODE 1 (2..10V)

Mode 1 is most often used mode of operation. It has 2 pre-prepared inputs that can be used for either digital control or with analog control voltages. Additional 10.5V output provides voltage feedback for analog or digital control.

Terminal designation	Signal function
SET1 / RUN	RUN input. Signal load 0.5 mA.
COM / 0V	Common ground for voltage input.
SET2 / MAX	MAX input. Signal load 0.5 mA
SET3 / FB	10.5 V feedback voltage for SET1 and SET2.

DIGITAL (SWITCH) CONTROL

Mode 1 connection configurations (switch)

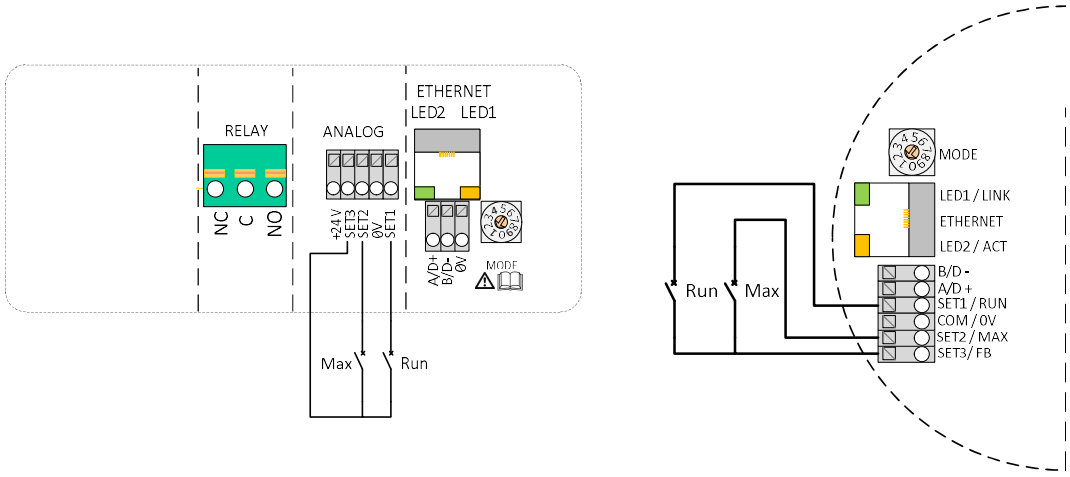

Contact position		Function	Description
RUN	MAX		
		Stop the pump	The pump is stopped
		Start the pump	The pump will run with internal set point 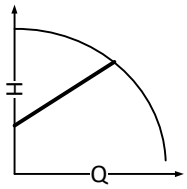
		Minimum curve	The pump will run with minimal speed for selected regulation mode 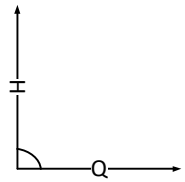
		Maximum curve	The pump will run with maximum speed form selected regulation mode 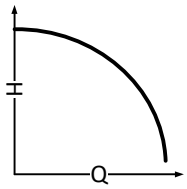

ANALOG CONTROL

Mode 1 connection configurations (analog)

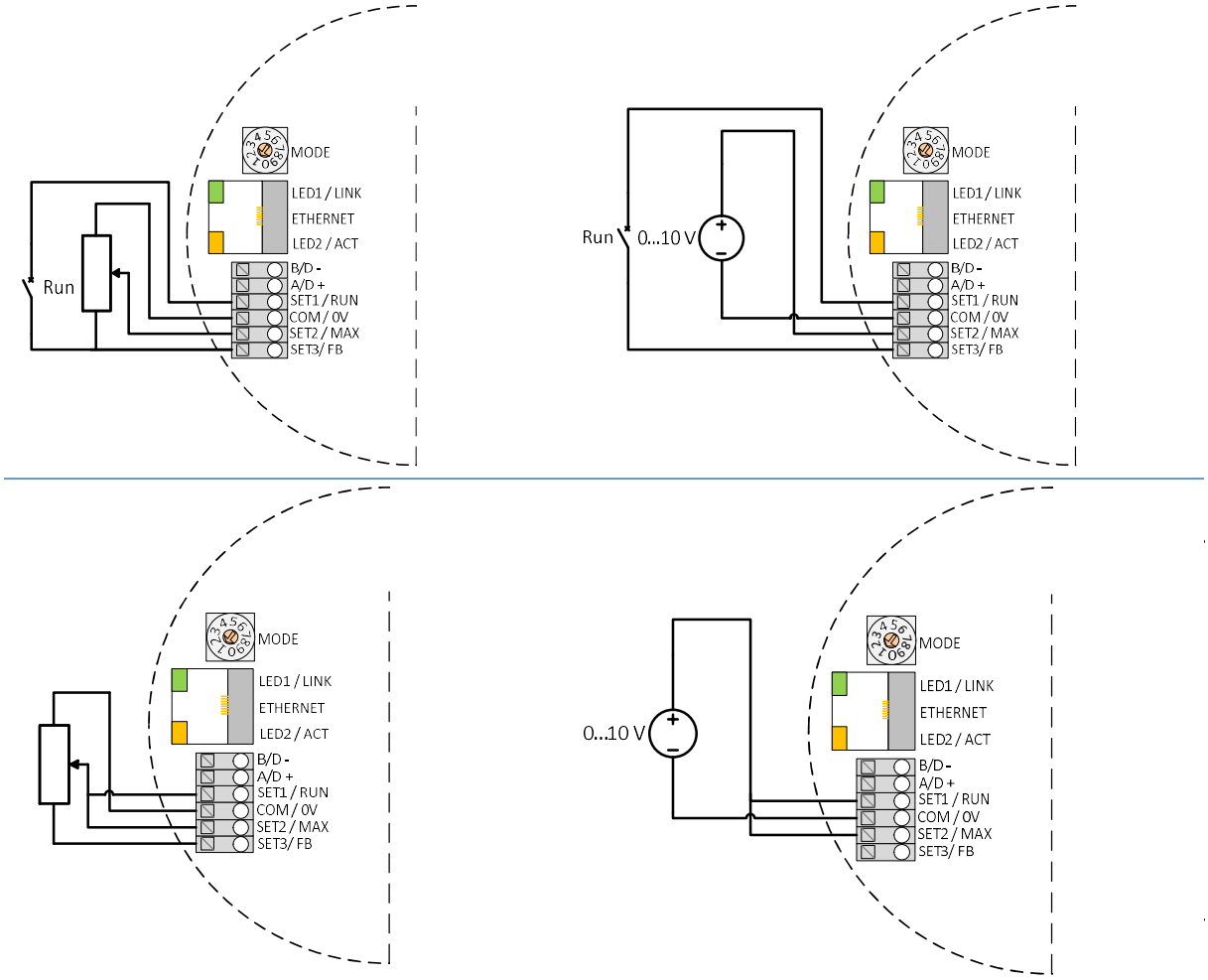

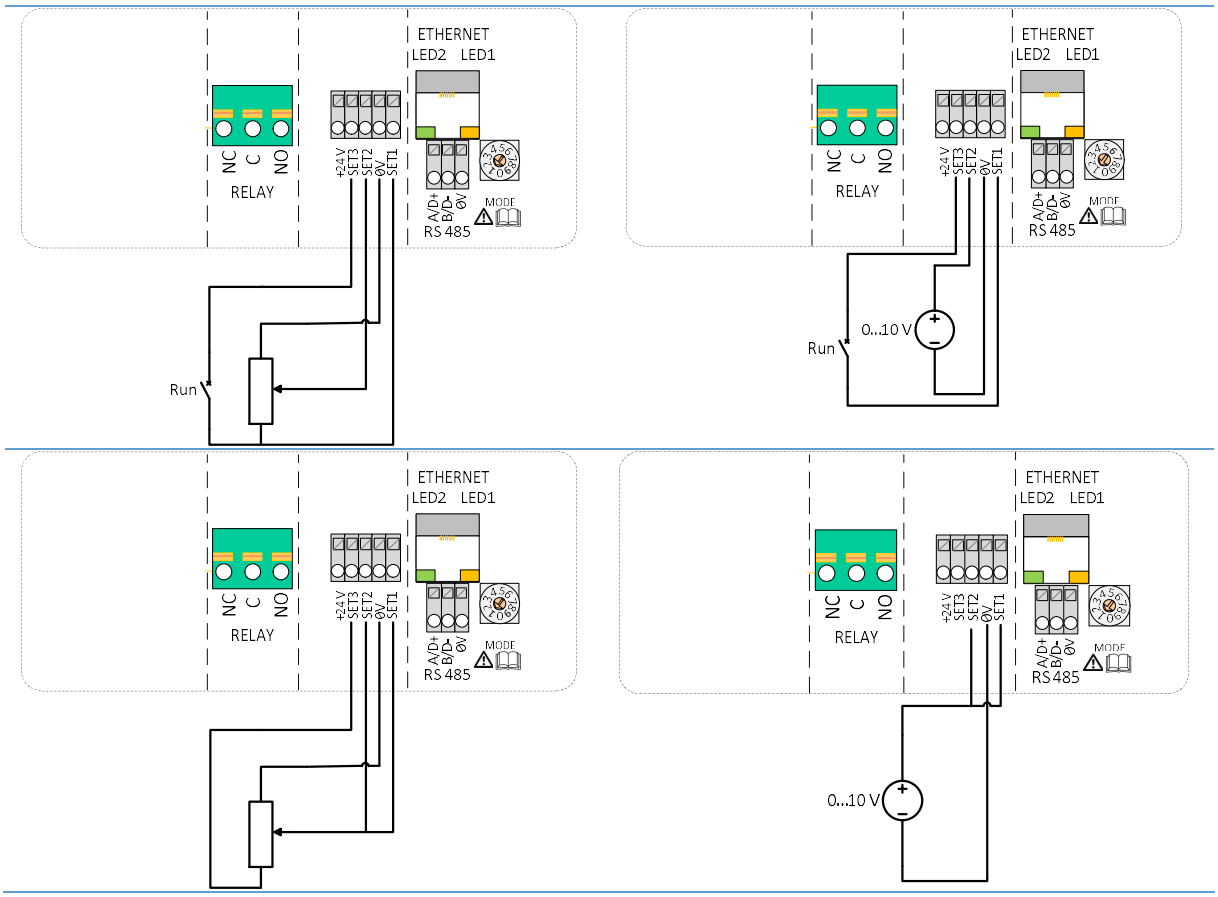
ETHERNET
LED2 LED1
NC
C
NO
RELAY
+24 V
SET3
SET2
0V
SET1
A/D+
B/D-
0V
RS 485
MODE
Run
0...10 V

RUN voltage	MAX voltage	Function
< 2 V	< 1 V	Pump stopped
> 3 V	< 1 V	Internal regulation
< 2 V	2..10 V	Minimum curve

> 3 V 2..10 V

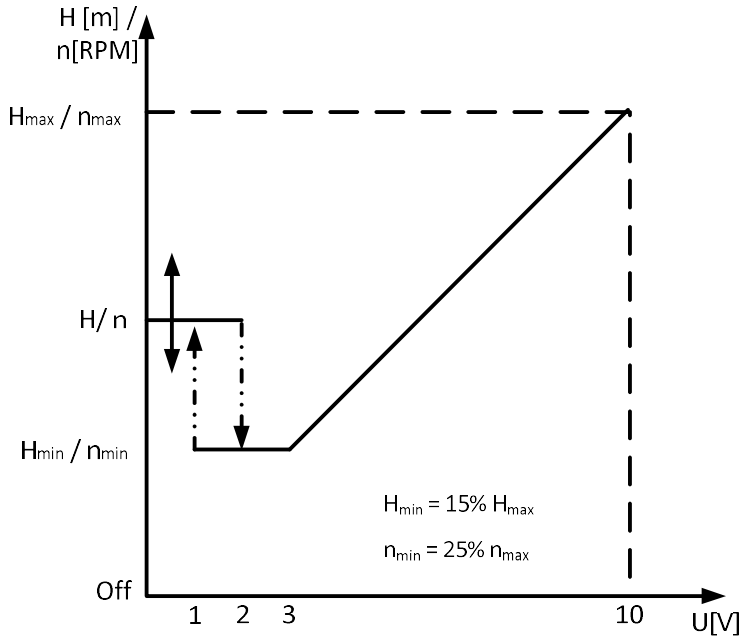

Figure 1: External 2..10 V transfer curve for Mode 1

0..10 V
(RUN+MAX)

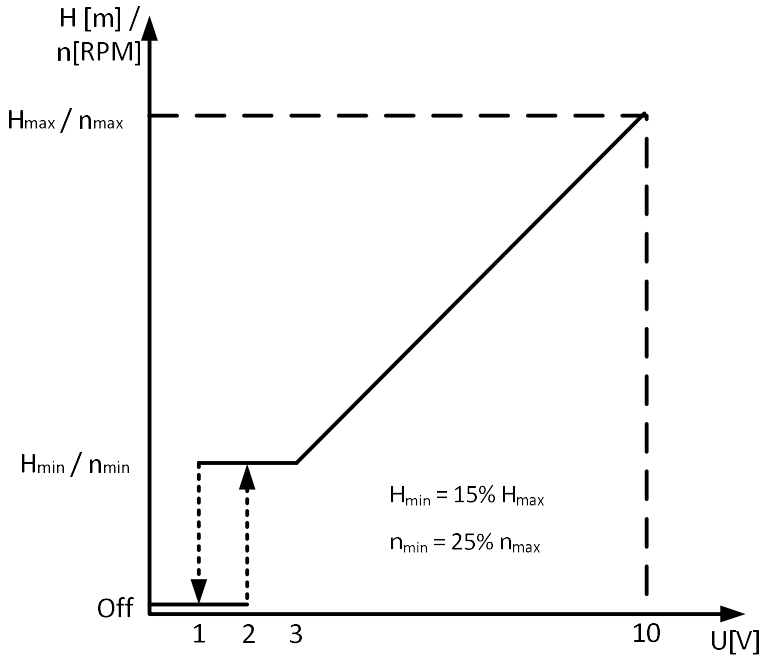

Figure 2: External 0..10 V transfer curve for Mode 1

4.5. MODE 2 (0..10V)

Mode 2 is used for external 0..10 V voltage control.

Terminal designation	Signal function
SET1 / RUN	RUN input. Signal load 0.5 mA.
COM / 0V	Common ground for voltage input.
SET2 / MAX	SPEED input. Signal load 0.5 mA
SET3 / FB	10.5 V feedback voltage for SET1 and SET2.

Mode 2 connection configurations

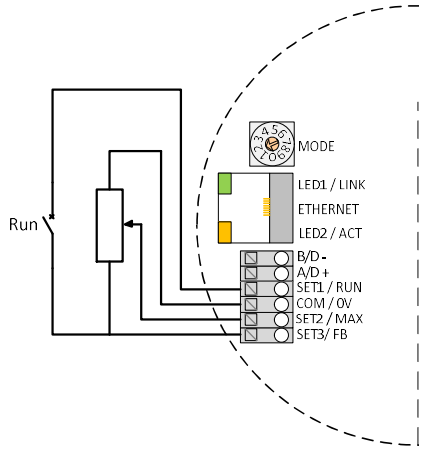

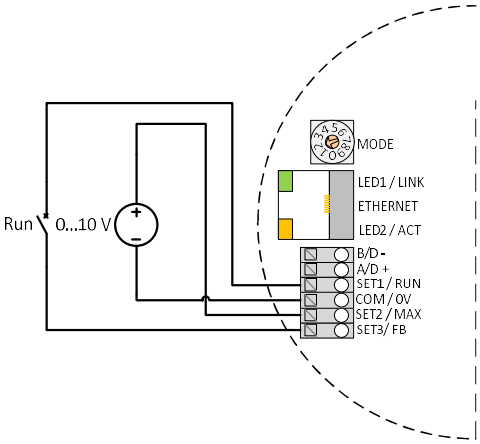

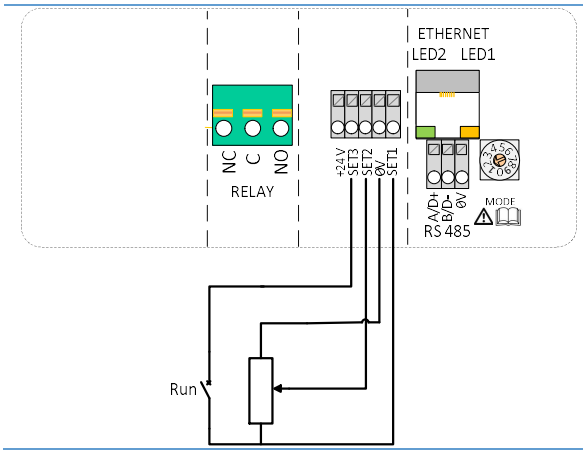

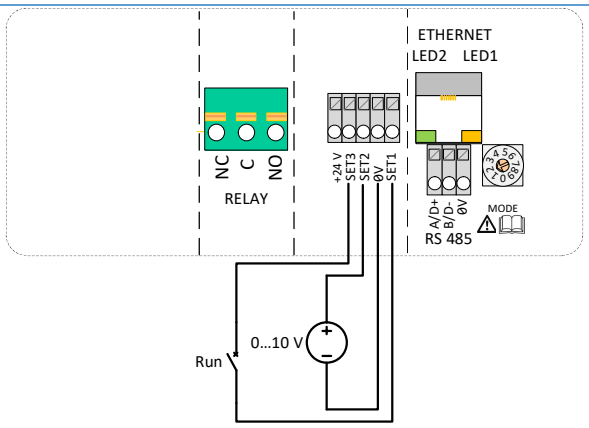

RUN voltage	MAX voltage	Function
< 2 V	0..10 V	Pump stopped.
> 3 V	0..10 V	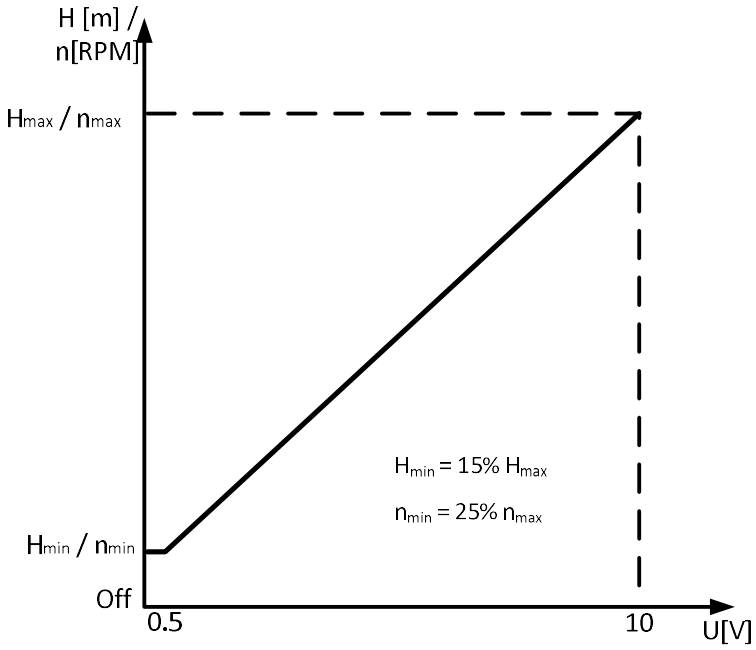

Figure 3: External 0..10 V transfer curve for Mode 2

4.6. MODE 3, 4 (PWM)

Mode 3 and 4 is used for PWM control and feedback according to IEC 60469-1. The difference between these two modes is in response to PWM-in signal. Mode 3 stops the pump when signal is missing or at 0 % while Mode 4 applies full power. See transfer curves in Figure 4 and Figure 5.

Terminal designation	Signal function
SET1 / RUN	PWM-in (PWM input) Signal frequency: 100 Hz – 10000 Hz (1000 Hz nominal) Signal load: 5 mA (4 – 6 mA, internally limited) Signal amplitude: 3.3 – 24 V (threshold at approx. 3V)
COM / 0V	Common ground for signals
SET2 / MAX	PWM-out (PWM output) Signal frequency: 75 Hz (±1 Hz) Signal drive: Open drain, (100 ohm, 20 mA internal current limit) Signal amplitude: 0 – 24 V Signal polarity: Active high (0% - pulled to COM, 100% -open)
SET3 / FB	FB (10.5 V) output, can be used to supply SET1 and SET2 bias.

Mode 3, Mode 4 connection configurations

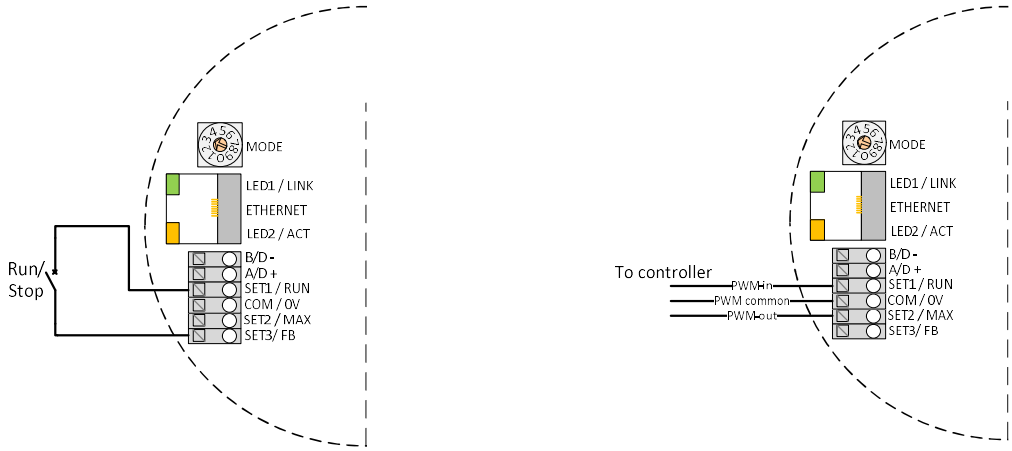

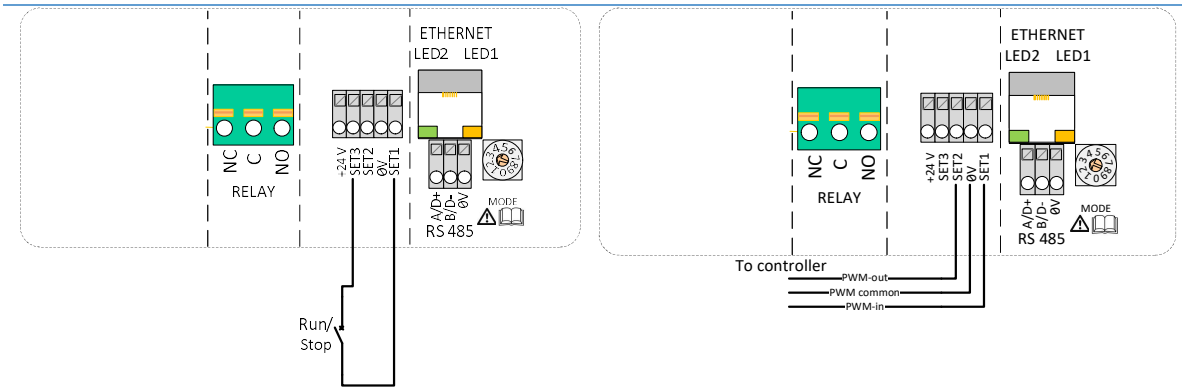

MODE 3 (SOLAR)

SET1 (PWM-in)	function
< 7 %	Standby (pump stopped)
12..15 %	Minimum setpoint
15..95 %	Pump setpoint increases linearly with input
> 95 %	Maximum setpoint

0..100 %

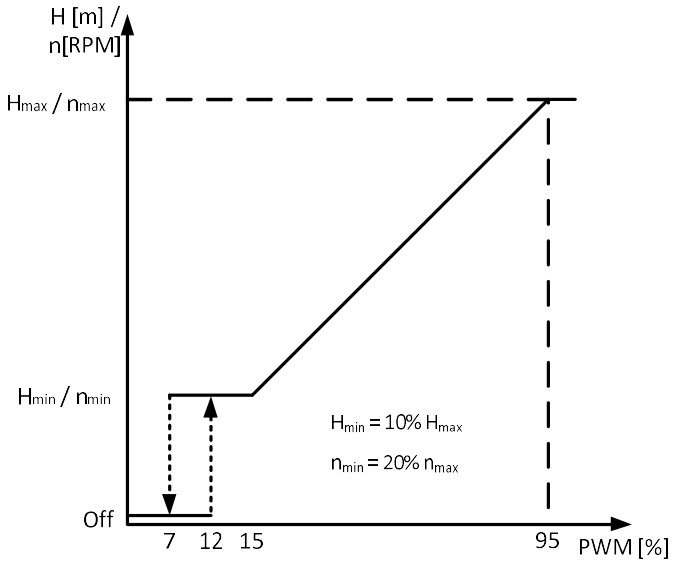

Figure 4: PWM solar transfer curve

MODE 4 (HEATING)

SET1 (PWM-in)	MODE 4 (HEATING) function
< 5 %	Pump at maximum speed
5..85 %	Pump setpoint decreases linearly with input
85..88 %	Minimum setpoint
> 93 %	Standby (pump stopped)
0..100 %	

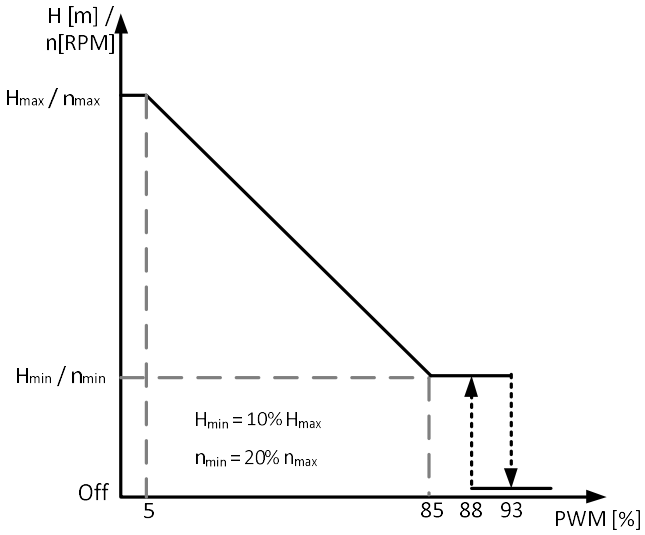

Figure 5: PWM heating transfer curve

PWM OUTPUT

SET2 (PWM-out)	Status
0 %	PWM output interface in short circuit
2.5 %	Pump in standby and ready
5 %	Normal operation, no flow
5..75 %	Normal operation, flow indication
75 %	Normal operation, maximum nominal flow
80 %	Error is present, performance might be reduced
85 %	Error is present, pump is still functional, but might be stopped
90 %	Error is present, pump is stopped
95 %	Error is present, pump is stopped, permanent failure, will not restart
100%	PWM output interface is open circuit or pump is not powered

5. RELAY OUTPUT

Terminal designation	Terminal description
MODE	Mode selection rotary switch. Used to show and configure mode of operation for relay.
LED1 / LINK	Slowly blinking when module is powered, permanently lid when link established[7].
LED2 / ACT	Flashing yellow when data reception detected. Combined (OR) with Modbus data reception indication[7].
NC	Normally closed relay contact. Opens when relay is active.
C	Relay common contact.
NO / OK	Normally open relay contact. Closes when relay is active.

The module contains one status relay, used to signal pump operation or malfunction. See table below for functionality.

Relay configuration	Output status	Description	Relay position	LED status[7] LED 1	LED 2
0	Error [default]	Only active when the pump is powered up and detects a problem with operation.	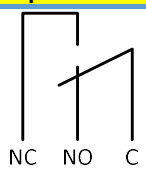	☼	○
1	Ready	The relay signal is active when the pump is ready for operation.	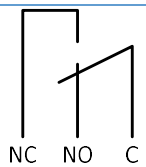	○	☼
2	Operation	The relay signal is active as long as the pump is operating. If the pump comes to a stop or an error occurs, relay will deactivate.	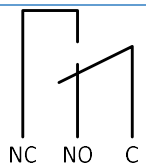	☼	☼
	-	Relay output not active.	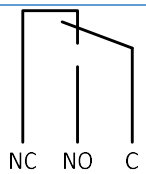		

Relay configuration number can be modified by either the web interface, Modbus register 012 or the Mode switch.

[7] When mode Mode 6 or Mode 7 is selected, LED1 and LED2 will show relay configuration. See section "4.3 Module mode selection"

LED is on ☼

LED is off ○

6. RS-485 BUS

6.1. RS-485 RELATED INTERFACE

Designation	Description
MODE	Can be used to reset network configuration
LED2 / ACT	Indicates Ethernet or RS-485 activity.
B/D-	RS-485 negative data signal.
A/D+	RS-485 positive data signal.
COM/0V	RS-485 common and analog input common (ground).

6.2. SERVICES

- Modbus RTU

6.3. BUS TOPOLOGY

RS-485 Connection can be made in either daisy chain style (if cabling allows such a connection) or a limited length passive tap. Schematic example is in **Napaka! Vira sklicevanja ni bilo mogoče najti.** below.

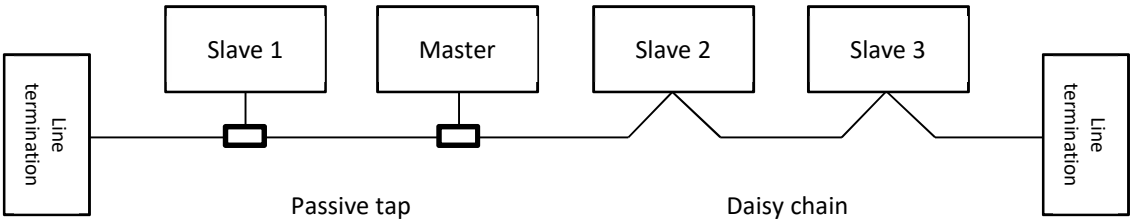

Figure 6: Example of Modbus network

Up to 32 single load devices can be connected to one RS-485 system without using a repeater. As this module is a 1/8 load device, up to 256 modules can be connected to the bus. Repeaters can be used to extend the maximum transmission distance and increase device count if needed.

6.4. CONNECTION TO RS-485

A screened, twisted-pair cable should be used. The cable screen should be connected to the COM terminal and connected to safety ground at one point.

NOTE: In some cases, better performance is achieved if no COM connection is made. Device can operate with 2 wire connection.

6.5. SPEED, PARITY AND ADDRESS

MODBUS RTU

By default, each device is set to 19200-E-1 (even parity), address 245. Properly set registers in section “8.5 NMTC control register” to configure each device before connecting it to existing network. Optionally power each device one by one, configuring the settings before adding another one.

6.6. TERMINATION

NMTC module contains neither termination nor bias circuitry. RS-485 wiring should be externally terminated if needed.
For short wiring and/or low baud rate, interface can operate without termination. However, it is recommended that termination (100-150 ohm resistor) is added on both ends of bus wiring. There are wiring length limits regarding to speed and termination:

Maximum speed [baud]	Maximum cable length [m]
38400	1200, terminated cable
9600	1200
19200	500
38400	250

NOTE: Any branch/derivative cable is considered unterminated. Keep them short, below 250m combined for maximum speed and reliability.

7. ETHERNET BUS

7.1. ETHERNET RELATED INTERFACE

Terminal designation	Description
MODE	Can be used to reset network configuration
LED1 / LINK	Slowly blinking when module is powered, permanently lid when link established.
Ethernet	10BASE-T RJ-45 connector.
LED2 / ACT	Indicates Ethernet or RS-485 activity.

7.2. SERVICES

- Http server on port 80
- Modbus server on port 502

7.3. BUS TOPOLOGY

Ethernet connection topologies

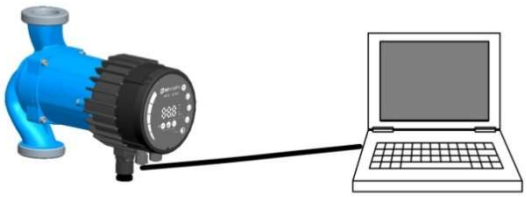

Figure 7: connecting to a computer with a cross-over cable

Figure 8: connecting to a network via router

7.4. CONNECTING TO PUMP AD-HOC

When connecting directly with the computer, a crossover cable must be used to connect with the pump. The pump can then be accessed at IP address “192.168.0.245” or “nmtpump” if NBNS is enabled. Alternative addresses are “192.168.0.246” or “nmtpump2” for left twin.

The computer must be set up to have a dynamic IP address or be in the same subnet range.

7.5. CONNECTING TO PUMP VIA ROUTER

When connecting via a router, a patch cable must be used to connect with the pump. The pump can then be accessed by typing IP address “192.168.0.245” or “nmtpump” or “192.168.0.246” or “nmtpump2” if it’s a left twin pump in to your web browsers address bar.
The computer must be set up to have a dynamic IP address.

7.6. PUMP CONFIGURATION OVER ETHERNET

See chapter “9. HTTP server”.

8. MODBUS

8.1. MODBUS RELATED INTERFACE

Modbus can operate over either RS-485 or Ethernet bus.

- See chapter "6. RS-485 bus" for RS-485 bus wiring details.
- See chapter "7. Ethernet bus" for Ethernet wiring details.

8.2. MODBUS RTU OVER RS-485

NMTC is a Modbus RTU slave.

Typically, only one master device is connected to the serial bus, and one or several slaves are also connected to the bus. Slaves do not communicate with each other and will never transmit data without receiving a proper request from the master device.

8.3. MODBUS OVER ETHERNET

Modbus device is available at port 502. Default address is thus 192.168.0.245:502

Supported protocols are:

- Modbus TCP
- Modbus RTU over TCP
- Modbus UDP
- Modbus RTU over UDP

Protocol is automatically recognized according to received packet and no additional configuration is needed.

8.4. REGISTER OVERVIEW

NMTC Modbus RTU registers are grouped in the following register blocks:

Start address	Register block	Readable/Writeable	Description
001	NMTC configuration	R/W	Configuration of the NMTC module.
021	NMTC status	R	Status registers for the NMTC module.
101	Pump control	R/W	Pump control registers.
201	Pump status	R	Status data from the pump.
301	Pump data	R	Measured data from the pump.

All addresses contain 16 bit (one Word) registers. Some are bit interpreted while others are combined for a 32 bit value.

NOTE: All register addresses are 1-based. Address 001 is thus transmitted over bus as 0x0000.

8.5. NMTC CONTROL REGISTERS

Registers in this block are read with either function codes 0x03 or 0x04. They can be written as holding registers with function codes 0x06 and 0x10.

NOTE: All values in this block are stored in nonvolatile memory immediately after write.
NOTE: See section "4.3 Module mode selection" and use Mode 8 or 9 to restore default settings if you cannot access the controller after writing to these registers.

Address	Register name	Range	Resolution	Description
001	SlaveDelay	0..10000	1 ms	Delay in milliseconds for slave reply. This delay will be added to every Modbus reply [default = 0].
002	RESERVED			
003	ModbusAddress	1..247	1	Modbus slave/device address [default = 245].
004	BitRate	0..5	1	RS-485 transmission speed enumeration. 0 = 1200 baud 1 = 2400 baud 2 = 4800 baud 3 = 9600 baud 4 = 19200 baud [default] 5 = 38400 baud 6 = 57600 baud
005.. 008	RESERVED			
009	Parity	0..2	1	Parity setting to be used for communication. 0 = No parity 1 = Even parity [default] 2 = Odd parity
010	StopBits	1..2	2	Stop bits used for communication. 2 stop bits will only be used when “Parity” is set to 0. 1 = 1 stop bit [default] 2 = 2 stop bits
011	RESERVED			
012	RelayControl	0..2	1	Configures module relay output. 0 = indicates fault 1 = indicates pump ready 2 = indicates pump operation See section “5 Relay output”.
013	RESERVED			
014	SET1Type		1	Configuration for SET1 terminal. 0 = "NO FUNCTION" 1 = "RUN input 2-3V" 2 = "MAX input 0-10V" 3 = "MAX input 2-10V" 4 = "RUN input 4-6mA" 5 = "MAX input 0-20mA" 6 = "MAX input 4-20mA" 7 = "FB output 10.5V" 8 = "FLOW output 2-10V" 9 = "FLOW output 4-20mA" 10 = "RPM output 2-10V" 11 = "RPM output 4-20mA" 12 = "ERROR output 10-0V" 13 = "ERROR output 20-0mA" 14 = "PWM SOLAR input" 15 = "PWM HEATING input" 16 = "PWM FLOW+ERR output"
015	SET2Type		1	Configuration for SET2 terminal. See enumeration for register 014
016	SET3Type		1	Configuration for SET3 terminal. See enumeration for register 014

8.6. NMTC STATUS REGISTERS

Registers in this block are read with either function codes 0x03 or 0x04. They are read-only.
This block can be used for various kinds of fault finding.

Address	Register name	Resolution	Description
021..022	RESERVED		
023	SoftwareVersion	0.1	Module software version
024..029	RESERVED		
030	ProductVersion	1	Product version [32x for NMTC module, x denotes hardware revision]
031	RESERVED		
032	SoftwareVersion	0.1	Module software version[10 = 1.0]

8.7. PUMP CONTROL REGISTERS

Registers in this block are read with either function codes 0x03 or 0x04. They can be written as holding registers with function codes 0x06 and 0x10.

Address	Register name	Range	Description
101	ControlReg	b0: RemoteAccess	Control bit that sets local or remote control. Setting this bit will enable pump control over Modbus. 0 = Local 1 = Remote (controlled by Modbus master).
		b1: OnOffReq	Control bit that switches the pump on or off. 0 = Off (stop) 1 = On (start).
		b2..3: RESERVED	-
		b4:	Control bit saves values in register block as default. 0 = No save 1 = Save as default. This value will be reverted back to 0 when set.
		b5..15: RESERVED	-
102	AltControlMode		Alternative Control mode. Use of register 108 is preferred. Sets the control mode enumeration. 0 = ConstantRPM 1 = ConstantRPM 3 = ConstantHead 4 = ConstantHead 5 = ConstantHead 6 = ProportionalHead 128 = AutoHeadMode **NOTE:** values outside this range reserved.
103	OperationMode		RESERVED
104	SetPoint	0.. 10000	Sets desired pump set point. 0 will stop the pump. 10000 will set the pump to maximum output for desired mode. Values outside of valid range will cause the pump to operate with front panel set values.
105	RelayControl	0..2	Configures relay output. 0 = indicates fault 1 = indicates pump ready 2 = indicates pump operation See section “5 Relay output”.
106..107	RESERVED		
108	ControlMode	0..3	Sets the pump control mode. 0 = AutoHeadMode (Automatic head mode) 1 = ProportionalHead (Head proportional to flow) 2 = ConstantHead (Head is kept constant) 3 = ConstantRPM (Speed is kept constant) **NOTE:** values outside this range reserved. See section “4.2 Control variables” for exact parameter to be controlled.

8.8. PUMP STATUS REGISTERS

Registers in this block can be read by means of function codes 0x03 and/or 0x04. They are read-only.

Address	Register name	Description
201	StatusReg	
	b0..b5: RESERVED	-
	b6: Rotation	Indicates if the pump is rotating (running) or not. 0 = No rotation 1 = Rotation.
	b7: RESERVED	
	Bit 8: AccessMode	Indicates if the pump is locally or remotely controlled. 0 = Local (a source with higher priority controls the pump) 1 = Remote (controlled by Modbus master).
	Bit 9: IsOn	Indicates if the pump is on or off. 0 = Off 1 = On It not necessarily indicate rotation as an error might stop the pump.
	Bit 10: Error	Indicates if there is a problem with proper operation. 0 = No problem 1 = Error present. Pump might still run.
	Bit 11: RESERVED	-
	Bit 12: RESERVED	-
	Bit 13: NearMaxSpeed	Indicates if the pump is running near maximum speed. 0 = No 1 = Yes. This flag is set when power or speed is over 95% of rated maximum.
	Bit 14: RESERVED	-
	Bit 15: NearMinSpeed	Indicates if the pump is running near minimum speed. 0 = No 1 = Yes. This flag is set when speed falls below 1/3 of rated maximum.
202	RESERVED	(TBD)
203	ControlMode	Indicates the actual control mode. 0 = ConstantRPM 1 = ConstantRPM 3 = ConstantHead 4 = ConstantHead 5 = ConstantHead 6 = ProportionalHead 128 = AutoHeadMode.
204	RESERVED	
205	ErrorCode1	Current first error code. 0 - when pump is operating without problems. This value will always be non-zero when there is an error present. See section “10.1 Error codes” for code details.

206	ErrorCode2	Second error code. Non-zero when there is more than one error. See section “10.1 Error codes” for code details.
207	ErrorCode3	Third error code. Non-zero when there is more than two errors. See section “10.1 Error codes” for code details.
208	ControlMode	Indicates the actual control mode. 0 = AutoHeadMode (Automatic head mode) 1 = ProportionalHead (Head proportional to flow) 2 = ConstantHead (Head is kept constant) 3 = ConstantRPM (Speed is kept constant). **NOTE:** values outside this range reserved. See section “4.2 Control variables” for exact parameter to be controlled.

8.9. PUMP DATA REGISTERS

Registers in this block can be read by means of function codes 0x03 and/or 0x04. They are read-only.

Modbus address	Register name	Range	Resolution	Description
301	Head		0.01 m	Pump head estimation in meters of water column.
302	Flow		0.1 m^3/h	Pump flow estimation.
303	Efficiency		0.01 %	Estimated pump efficiency.
304	Speed		1 rpm	Motor speed.
305	Frequency		0.1 Hz	Motor frequency [100.0 Hz for 3000 rpm and 4 pole motor].
306..307	RESERVED			
308	ActualSetPoint	0..10000	0.01 %	Indicates actual set point of the pump. (-1 for internal pump regulation). tbd
309..311	RESERVED			
312 313	PowerHI PowerLO	$0..2^{32}$	1 W	Total power consumption of the system.
314..317	RESERVED			
318	CircuitTemp	-5500.. 16000	0.01 °C	Power electronics hotspot temperature.
319	MotorTemp	-5500.. 16000	0.01 °C	Motor compartment temperature.
320..321	RESERVED			
322	LiquidTemp	-5500.. 16000	0.01 °C	Liquid temperature.
323..326	RESERVED			
327 328	OperationTimeHI OperationTimeLO		1 hour	Total operation time (above zero speed) of the pump.[8]
329 330	TotalPoweredTimeHI TotalPoweredTimeLO		1 hour	Total power-on time of the module.[8]
331	RESERVED			
332 333	EnergyHI EnergyLO		1 kWh	Total energy consumption of the system.[8]

[8] Not available on all models.

9. HTTP SERVER

The communications module has a built in web server which allows you to access your pump directly to an existing Ethernet connection. Direct connection to a computer is also possible with a cross over cable.
The web server uses HTML pages to set/view:

- Regulation mode settings
- Regulation parameters (power, RPM, head, flow, efficiency)
- Relay settings
- External control inputs
- Current and previews error
- Pump statistics (power consumption, run time and other).

9.1. WEB SERVER

Pump responds as a web server on port 80. See chapter “7. Ethernet bus” for Ethernet configuration details.

Pump configuration is possible via HTML pages that offer different options:

1. **Overview** (default page when you connect to the pump, web page OVERVIEW) displays pump operation summary like:
   - Operating mode,
   - Power consumption,
   - Head,
   - Estimated flow,
   - RPM
   - Estimated efficiency,
   - Priority set point,
   - Mode switch position
   - Input/output status
   - Replay status
   - Error code
   - Twin pump status
   - Night mode status
   - Motor temperature
   - Heat sink temperature,
   - Number of restarts.
2. **Pump settings** (web page PUMP) is meant to provide regulation and control (input and output) settings. It has control over:
   - Operation mode
   - Head limit(depending on pump mode)
   - RPM limit (depending on pump mode),
   - Ratio between head and flow HQ (depending on pump mode)
   - Input/output control.
   - Relay control.

Setting can be saved to permanent memory by pressing the SAVE button.

3. **Network settings** (web page NETWORK) provide a way to change network configuration:
   - NetBIOS name - is a local network name service. Instead of ‘192.168.0.245’ you can for example use 'http://nmtpump'. Default: nmtpump,

- Pump IP address - is a pump network address. The pump is seen as http server on this address, default: 192.168.0.245,
- DHCP server - provides lease for "point to point" connection (cross-over cable to computer for example). Will disable itself if another DHCP server is found,
- DHCP client will automatically acquire DHCP address from the network,
- Default gateway – provides connection route to larger networks. This is usually a router address, default: 192.168.0.1,
- Subnet mask - sets subnet address range that is on the same subnet and can be reached directly. The rest of communication goes over the gateway, default: 255.255.255.0,
- Twin mode with IP - will connect two pumps for alternating operation. When two pumps are configured for twin mode, they will switch about once per day. Setting this field to inexistent IP will disable this option! Set it so the first pump references the second and vice versa. Default: 192.168.0.246.

Setting can be saved to permanent memory by pressing the SAVE button.

4. **Log** (web page LOG) displays possible previous and current errors.

5. **MORE** (web page MORE) has link to additional manuals and tools that might be available. Has an option to update NMTC module software via provided file.

9.2. XML DATA

Pump data available at /pump.xml

10. FAULT FINDING

10.1. ERROR CODES

The following codes will show up on display panel and on the appropriate Modbus registers to help you diagnose the cause of improper operation.

Error code	Description	Probable cause
E1x	*Load errors*	
E10 (drY)	Low motor load	Low load detected. Pump is running dry.
E11	High motor load	Motor might be faulty or viscous medium is present.
E2x	***Protection active***	
E22 (hot)	Converter temperature limit	Circuit is too hot and power was reduced to less than 2/3 of rated power.
E23	Converter temperature protection	Circuit is too hot to run, pump stopped.
E24	Converter overcurrent	Hardware overcurrent protection triggered.
E25	Overvoltage	Line voltage is too high.
E26	Undervoltage	Line voltage is too low for proper operation.
E27	PFC Overcurrent	Power correction circuit current cannot be controlled
E3x	*Pump errors*	
E31	Software motor protection active	Average motor current was too high, pump load is much higher than expected.
E4x	***Device specific error codes***	
E40	General frequency converter error	Electrical circuitry did not pass self-test.
E42 (LEd)	LED faulty	One of the display segment diodes is faulty (open/short).
E43 (con)	Communications failed	Display board does not detect proper connection to main board, but power supply is present.
E44	DC link current offset	Voltage on DC link shunt (R34) not in expected range.
E45	Motor temperature outside limits	During MFG. TEST, this is 10 kΩ, 1% resistor for 10 °C..30 °C During operation, expected values are -55 °C..150 °C.
E46	Circuit temperature outside limits	During MFG. TEST, this is 0 °C..50 °C. During operation, expected values are -55 °C..150 °C.
E47	Voltage reference outside limits.	Comparison between internal references does not match.
E48	15V outside limits	15 V supply not 15 V.
E49	Test load does not match	No test load detected or current measurement does not work properly (MFG. TEST).
E5x	***Motor error codes***	
E51	Motor parameters out of range	Motor does not behave as expected.
E52	Thermal protection active	Motor temperature is too hot to operate.
E53	Invalid model selected	Pump model not valid or incompatible with drive